# HunterDouglas

Installation • Operation • Care

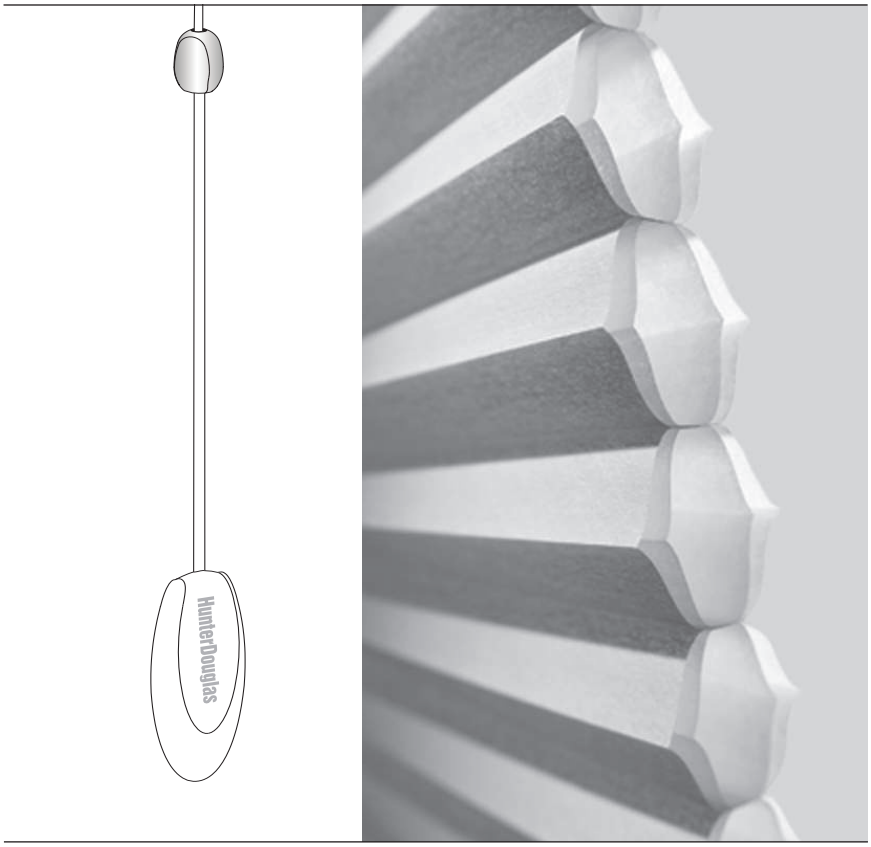


# Duette® Honeycomb Shades

## UltraGlide® Lifting System

## CONTENTS


### Getting Started:

Mounting Types And Window Terminology ..... 1
Installation Components Needed ..... 1
Tools And Fasteners Needed ..... 2
Product View ..... 3

### Installation:

Mount The Installation Brackets For Inside Mount ..... 4
Mount The Installation Brackets For Outside Mount ..... 5
Mount The Installation Brackets For End Mount ..... 6
Install The Shade ..... 7
Attach The Hold-Down Brackets (Optional) ..... 7

### Operation:

Operate The Shade ..... 8
Troubleshooting ..... 10

### Care:

Cleaning Procedures ..... 14
Remove The Shade ..... 15

### Child Safety:

Warning ..... 16


**Questions?**

Call the Hunter Douglas Customer Information Center at
1-888-501-8364.


© 2009 Hunter Douglas Inc.
® Registered trademark of Hunter Douglas Inc. ™ Trademark of Hunter Douglas Inc.

Thank you for purchasing Hunter Douglas Duette® With UltraGlide® honeycomb shades. With proper installation, operation, and care, your new shades will provide years of beauty and performance. Please thoroughly review this instruction booklet before beginning the installation.

## Mounting Types And Window Terminology

If the installation brackets are mounted correctly, the rest of the installation process follows very easily. To prepare for this important first step, review the mounting types and basic window terminology illustrated below.

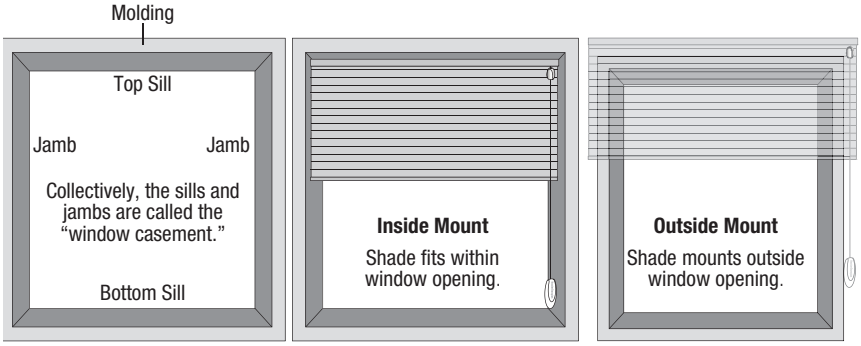


## Installation Components Needed

Check the packaging to be sure you have all the components needed to install your shade. Keep the packaging until the shades perform to your satisfaction. If your shade has a protective plastic cover on the fabric covered headrail, keep the plastic in place until the shade is installed.

| Shade Width | Brackets Required |
|---|---|
| 12" - 36" | 2 |
| 36 1/8" - 72" | 3 |
| 72 1/8" - 108" | 4 |
| 108 1/8" - 144" | 5 |
| 144 1/8" - 150" | 6 |

### Required Components

- **Installation Brackets.** The number of installation brackets required varies with shade width, as shown in the table. Your order will include one of the following types of installation brackets.

3/8" Pleat Size Installation Bracket

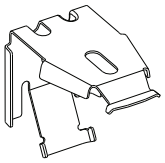

3/4" And 1 1/4" Pleat Size Installation Bracket

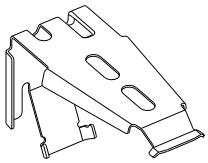

**IMPORTANT:** For illustration purposes, the 3/4" and 1 1/4" installation brackets are shown throughout the following instructions. The 3/8" brackets follow these same installation procedures.

## GETTING STARTED

### Optional Components

- **Extension Brackets.** Extension brackets can add up to 3 1/2" of clearance for outside and end mounts. If ordered, there should be the same number of extension brackets as installation brackets.

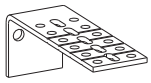

Extension Bracket
Outside Mount
(Optional)

- **Spacer Blocks.** Spacer blocks provide additional clearance to accomodate various molding widths. If ordered, Hunter Douglas provides both 1/2" and 1/8" width spacer blocks designed to work separately, or fit together, if desired. There should be a maximum of 1 1/2" of spacer blocks per installation bracket. Separate spacer blocks prior to use.

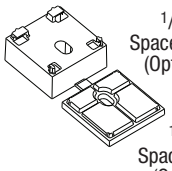

1/2"
Spacer Block
(Optional)

1/8"
Spacer Block
(Optional)

- **Hold-Down Brackets.** Hold-down brackets provide stability and prevent swaying by securing the bottom rail (i.e. often used in French door applications).

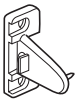

Hold-down Bracket
Outside Mount (Optional)

### Tools And Fasteners Needed

- Flat blade and Phillips screwdriver
- Measuring tape and pencil
- Power drill, 3/32" drill bit, and a 1/4" hex driver
- Level
- Needlenose pliers

In addition, you will need fasteners designed to work with your specific mounting surface(s).

- **#6 Hex Head Screws (Provided).** Two 1½" screws are provided per installation bracket.
- **Longer #6 Hex Head Screws (Not Provided).** If using spacer blocks, use a #6 mounting screw long enough for a secure attachment.
- **Wall Anchors (Not Provided).** If mounting into drywall, you will need wall anchors to ensure a secure installation.
- **Speed Nuts and Screws (Provided).** Extension brackets come with screws and speed nuts.

**#6 x 1½"**
**Hex Head Screw**
(Provided)

**Longer #6 Hex Head Screw**
**For Use With Spacer Blocks**
(Not Provided)

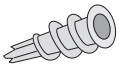

**Wall Anchor Or**
**Expansion Bolt**
(Not Provided)

**Speed Nut**
**And Screw**
(Provided With Each
Extension Bracket)

## Product View

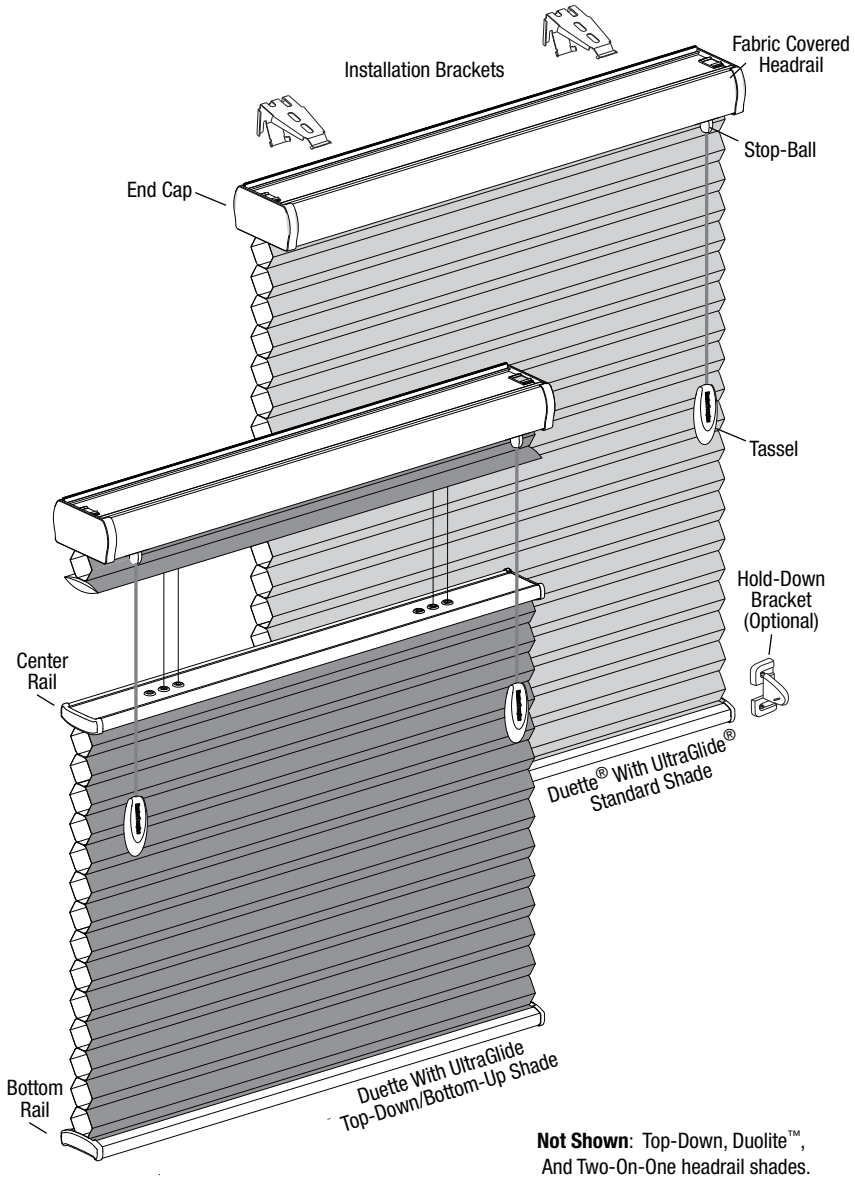


**Not Shown**: Top-Down, Duolite™, And Two-On-One headrail shades.

## Mount The Installation Brackets For Inside Mount

- Measure in 2" from each jamb for bracket location.
  - ➤ If more than two installation brackets came with your order, space additional bracket(s) on studs, evenly between the two end brackets.

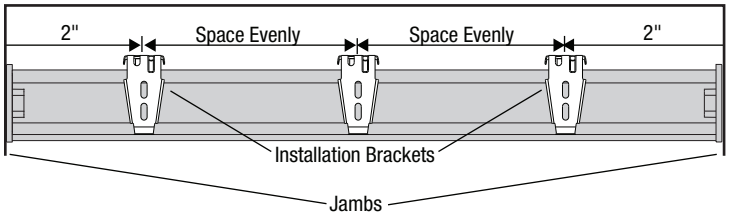


- Mark the location of the screw holes.
  - ➤ The depth required for a minimum mounting or a fully recessed mounting will vary depending on the fabric pleat size. For fully recessed mounting, the fabric will be flush with the front of the sill, when raised. Refer to the chart for depth requirements.
  - ➤ Fully recessed inside mounting is best for energy efficiency.

| Depth Chart For Bracket Placement | | |
|---|---|---|
| **Fabric Pleat Size** | **Minimum** | **Fully Recessed** |
| 3/8" | 1/2" | 2 1/4" |
| 3/4" | 1/2" | 2 7/8" |
| 1 1/4" | 1/2" | 3 5/8" |

- If mounting to a heavily textured surface, use the 1/8" spacer block as a shim between the installation bracket and the mounting surface.
- Use a 3/32" drill bit to drill holes for the mounting screws.

  **IMPORTANT:** If you are fastening the installation brackets to drywall, be sure to use wall anchors and follow the instructions provided with the anchors. (Anchors not provided.)

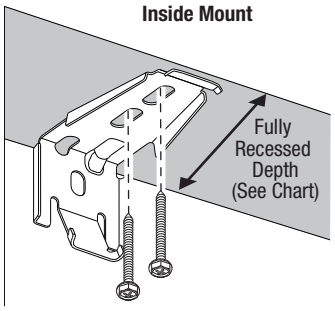


- Use a level to check that the mounting surface is level. Shim the brackets if necessary. (Shims not provided.)
- Use the hex head screws provided to fasten the installation brackets to the mounting surface.

  **IMPORTANT:** The front edges of the installation brackets must be level and aligned to each other.

## Mount The Installation Brackets For Outside Mount

- With the shade lowered, center it over the window opening at the desired height. Use a pencil to lightly mark each end of the headrail.

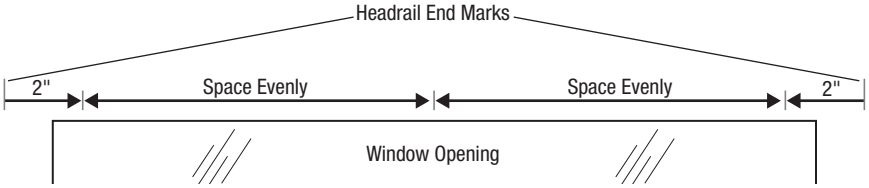


- Alternatively, measure the width of the headrail to determine its centerpoint. Measure the width of the window and determine its centerpoint.
  - ➤ Lower the shade and align these centerpoints, then mark each end of the headrail at the desired height.
- Measure and mark 2" in from each end of the headrail.
  - ➤ If more than two installation brackets came with your order, space additional bracket(s) evenly on studs, between the two end brackets and mark their location.
- Center each installation bracket on the marks and locate where to drill the screw holes.
  - ➤ A minimum of 1¼" flat vertical height is required from the top of the window sill.
  - ➤ The top of the installation brackets should be at the desired height. The brackets should be level and aligned.

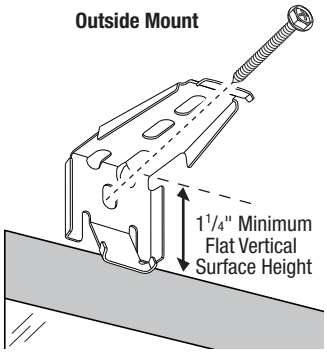


**CAUTION:** The rear of the blocks/brackets must be flush against a flat mounting surface. *Do not mount brackets on curved molding.*

- Using a 3⁄32" drill bit, drill holes for the mounting screws.

**IMPORTANT:** If you are fastening the installation brackets to drywall, be sure to use wall anchors and follow the instructions provided with the anchors. (Anchors not provided.)

- Fasten installation brackets to the mounting surface using the hex head screws provided.

## INSTALLATION

- If using spacer blocks, first attach the installation bracket to the spacer block before stacking additional spacer blocks together.
  - ➤ Insert the legs of the installation bracket into the tabs on the spacer block.
  - ➤ Then rotate the installation bracket back.

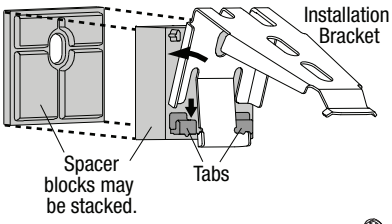


- Attach the spacer block/installation bracket to a flat vertical mounting surface with a #6 mounting screw long enough for a secure installation (screws not provided).

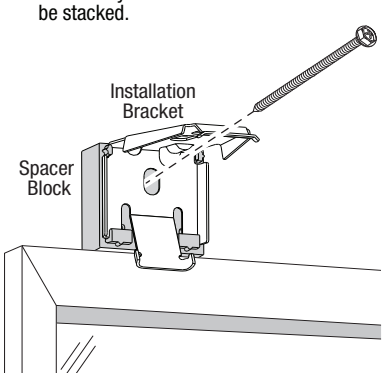


- When using extension brackets, attach an installation bracket to the underside of each extension bracket using the provided screws and speed nuts.

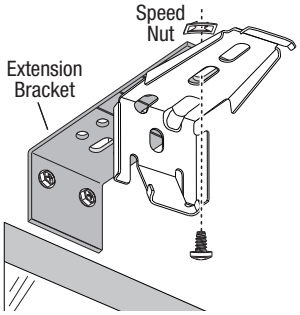


### Mount The Installation Brackets For End Mount

End mount the headrail when conventional mounting techniques will not work, for example, in an arched window.

- Mount the extension brackets on a surface at least 1¼" wide.
- Attach the installation brackets to the extension brackets using the provided screws and speed nuts.

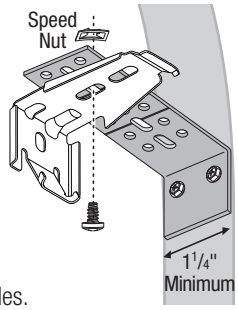


**IMPORTANT:** End mounting is not available for Two-On-One shades.

## Install The Shade

- Position the shade so that the cords face you.
- Slip the headrail into the installation brackets so the front of the bracket slides under the front groove on the top of the headrail.
- Gently roll the back of the headrail up and push back to snap into place.

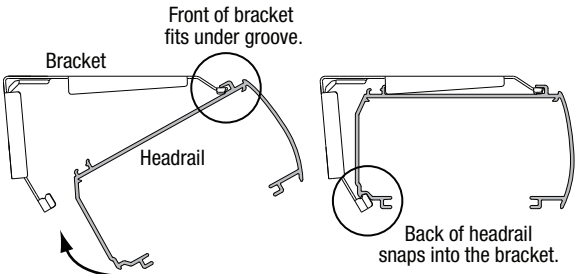


## Attach The Hold-Down Brackets (Optional)

Hold-down brackets can only be used on outside mounted shades.

- Lower the shade and place the pins from the hold-down brackets into the bottom rail end caps.
- On the mounting surface, mark the bracket hole locations.
- Check that the brackets are level and aligned, and attach them to the mounting surface using two screws.

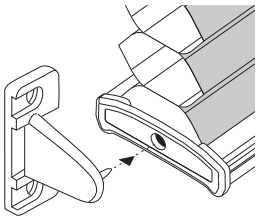

**IMPORTANT:** Disconnect the bottom rail from the hold-down brackets to raise the shade.

## Operate The Shade

For smooth operation, keep the cord close to the fabric when raising and lowering the shade.

### To Lower The Shade

- Pull the cord toward the center of the shade at about a 45° angle. A locking mechanism at the top of the cord releases with a "click." The shade lowers as you allow the cord to return to the vertical position.
- To stop the shade while lowering, move the cord back toward the vertical position and give a slight downward pull, until the locking mechanism engages.
- If a shade hits an obstruction as it is lowered it will stop, but the cords in each cord rout may become misaligned. This may cause the shade to be angled or tilted when fully raised. If this occurs, do the following:
  - ➤ Raise the shade slightly.
  - ➤ Lower the shade completely to the sill. In some cases, pull gently on the bottom rail to get it to drop completely.

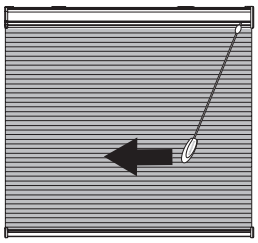

**To Lower**: Pull the cord toward the center of the shade and release.

**IMPORTANT:** If the shade is tilted when fully raised, do not pull harder on the cord. It does not correct the tilt and may make it worse.

### To Raise The Shade

- Pull the cord straight down or slightly toward the outside.
  - ➤ With each stroke the shade partially raises.
  - ➤ Allow the cord to retract after each downward stroke.
  - ➤ Use multiple strokes until the shade reaches the desired position.

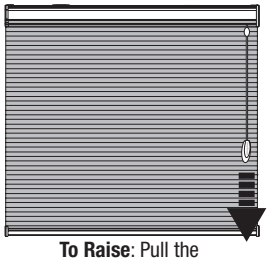

**To Raise**: Pull the cord straight down with short strokes.

## Duolite™ And Top-Down/Bottom-Up Shades

- To operate Duolite™ and Top-Down/ Bottom-Up shades, the right cord operates the center rail and the left cord operates the bottom rail.

  **IMPORTANT:** You must first lower the bottom rail before lowering the center rail. Likewise, you must first raise the center rail before raising the bottom rail.

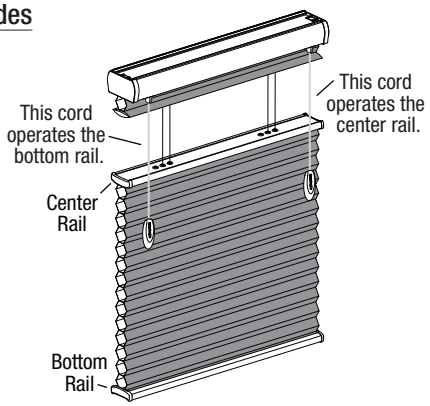

## Troubleshooting

| Problem | Solution |
|---|---|
| The shade will not fit into the installation brackets. | ■ Check that the installation brackets are level and aligned. Adjust and/or shim to level, if necessary.<br>■ Be sure the heads of the mounting screws are flush against the installation bracket.<br>■ Check that the headrail is completely inserted into the installation brackets. S*ee Install The Shade* on page 7. |
| The shade is hard to raise or lower, or will not raise or lower. | ■ Make sure that the shade fabric is not caught between the installation bracket and the headrail.<br>■ Check that the headrail and installation brackets are level and aligned in the window. The window may be out of square. To check if the window is square, measure the diagonals. Level the headrail by shimming the installation brackets, if necessary.<br>■ Check that lift cords/pull cords are not pinched or tangled.<br>■ If hold-down brackets are used, make sure they have been released before operating the shade. |
| The shade raises or lowers unevenly or the bottom rail is uneven when fully raised. | ■ Check that the headrail and installation brackets are level and aligned in the window. The window may be out of square. To check if the window is square, measure the diagonals. Level the headrail by shimming the installation brackets, if necessary.<br>■ Check to see if there is an obstruction in the shade's path. If a shade hits an obstruction as it is lowered it will stop, but the cords in each cord rout may become misaligned. This may cause the shade to be angled or tilted when fully raised. If this occurs, do the following:<br>➤ Raise the shade slightly.<br>➤ Lower the shade completely to the sill. In some cases, pull gently on the bottom rail to get it to drop completely.<br>**IMPORTANT:** If the shade is tilted when fully raised, do not pull harder on the cord. It does not correct the tilt and may make it worse. |

| Problem | Solution |
|---|---|
| The shade will not lower when pulling the cord. | ■ Check to see if the locking mechanism is released.<br>■ Pull the cord toward the center of the shade at about a 45° angle, to release the small, locking mechanism at the top of the cord. A “click” will indicate that the locking mechnanism has been released. Then let go of the cord to lower the shade. |
| The shade will not stay in the raised position. | ■ To lock the shade in the raised position (or anywhere along the path to the fully raised position), engage the locking mechanism at the top of the cord by pulling the cord straight down, or toward the outside of the shade. |
| The bottom rail is not level, or the shade height is incorrect. | **Shade Height Adjustment**<br>Shade height and adjustments to level the bottom rail can be made by adjusting the cord on the underside of the bottom rail.<br>■ Locate the ferrule, seated in a pocket in the bottom rail.<br>■ Remove the ferrule by pulling on the excess cord. If the cord has been trimmed, you will need to use needlenose pliers to access it.<br>■ To shorten the cord, hold the cord tight under the ferrule. Then slide the ferrule up toward the pocket.<br>■ To lengthen the cord, hold the cord tight between the pocket and the ferrule. Then slide the ferrule down.<br>■ After adjusting, place the ferrule fully back into the pocket.<br>■ Once you are certain of the final adjustments, tape the extra cord length to the bottom rail, or into the groove on the bottom rail (for future adjustments).<br> 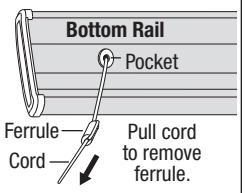 <br> 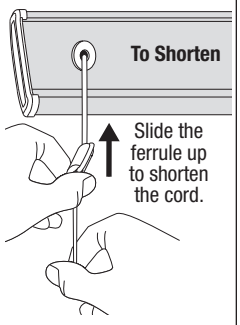 <br> 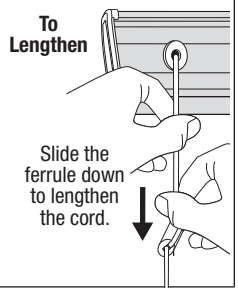 |

| Problem | Solution |
|---|---|
| The ferrule has come off the cord. How do I rethread the ferrule? | ■ Thread the end of the cord into the tapered end of the ferrule. Loop the end around the ferrule and back through the tapered end. Make sure the loop fits into the groove on the side of the ferrule. 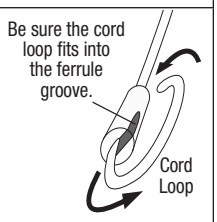  |
| The tassel cord length is too long. | The tassel cord length is usually 2/3 the length of the fully lowered shade.<br>**To Shorten The Tassel Cord**<br>■ Grasp both parts of the tassel (the colored cover and the frosted body).<br>■ Squeeze the tassel cover with your thumb and forefinger (at the "S" of the Hunter Douglas logo).<br>■ Separate and slide the tassel cover off from the tassel body.<br>■ Pull out the knotted end of the tassel cord.<br>■ Retie the cord at the desired shorter length, using a double knot.<br>■ Trim the tassel cord.<br>■ Pull the trimmed knot up inside the tassel.<br>■ Squeeze the sides of the tassel cover together while sliding it back onto the tassel body.<br>**IMPORTANT:** After reassembling, be sure there are no gaps between the two components. Check that they do not pull apart easily. The tassel cover should be securely seated into the tassel body. 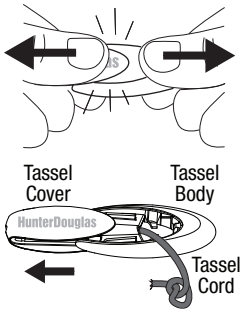  |

| Problem | Solution |
|---|---|
| The tassel cord and lower cord connector have detached from the upper cord connector. | **To Reattach The Tassel Cord**<br>■ Hook one side of the lower cord connector to the upper cord connector.<br>■ Rotate the lower cord connector until it snaps into place.<br>■ Twirl the tassel cord to pull any stray cord fibers out of the junction of the cord connector halves. Stray fibers in the junction may cause the connector to come apart.<br> 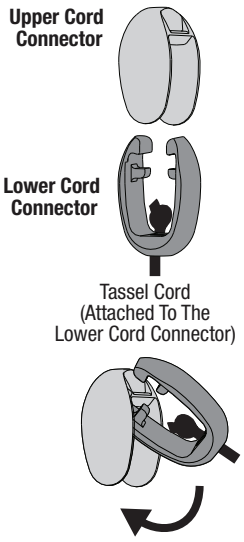 |

## CARE

### Cleaning Procedures

Hunter Douglas Duette® honeycomb shades are made of an anti-static, dust-resistant fabric which repels dirt and dust. For most honeycomb fabrics, the following options are available if your shade needs cleaning.

#### Dusting

- Regular light dusting with a feather duster is all the cleaning that is needed in most circumstances.

#### Vacuuming

- For deeper cleaning, vacuum gently with a brush attachment.

  **CAUTION:** Do not vacuum Architella® Elan™ or Architella Elan Eclipse™ fabrics.

#### Compressed Air/Hair Dryer (Cool Setting)

- Use compressed air or a hair-dryer on a cool setting, to blow dust and dirt off of shades.

#### Spot-Cleaning

- Prepare a solution of warm water and a mild detergent.
- Dampen a clean white cloth in the solution and wring it out.
- Dab the spot with the dampened cloth until it is gone. Do not rub the fabric.
- Allow the shade to dry in the completely lowered position.

  **CAUTION:** Do not spot-clean Batiste, Opalessence™, or Royale fabrics.

#### Bathtub Cleaning/Water Immersion

- Immerse the shade in a basin or bathtub filled with a mild detergent. Never immerse the headrail into the solution.
- Rinse with clean water.
- Before removing from the rinse water, fully raise the shade and tilt it to allow excess water to drain off.
- Reinstall the damp shade, lower it, and let it dry completely.

  **CAUTION:** Do not immerse Commercial, Royale, all opaque fabrics, and any fabric-covered valances.

## Ultrasonic Cleaning

- Some honeycomb fabrics can be ultrasonically cleaned by a professional.
- Specify that a mild detergent solution be used.
- Never immerse the headrail into the solution.
- Dry the shade completely in the lowered position.

**CAUTION:** Do not ultrasonically clean Commercial, Opalessence™, all opaque fabrics, and any fabric-covered valances.

## On Site Injection/Extraction Cleaning

This type of professional cleaning injects a cleaning solution into the fabric and extracts the dirty solution in the same motion.

- A dry method of injection/extraction is required for Architella, Commercial, Opalessence, Panache™, and any opaque fabrics.
- If using injection/extraction for Batiste fabrics, specify that no chemicals are used (water only).
- Never immerse the headrail into the solution.

**CAUTION:** Do not use injection/extraction cleaning on any fabric-covered valances.

## Remove The Shade

- While holding the headrail, lower the shade approximately 4".
- Push back on the bottom tab of the installation bracket to release the bottom edge of the headrail.
- After releasing the bottom edge, roll the back of the headrail downward and out from the bracket.

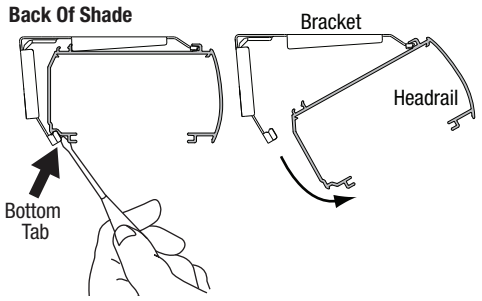


**IMPORTANT:** If the bracket is stiff, the headrail may be difficult to remove. Use a small flat blade screwdriver and push the blade against the bottom tab of the mounting bracket.

## CHILD SAFETY

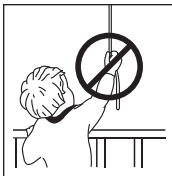

**WARNING**

**For more safety information call 1-888-501-8364 in the U.S. or 1-866-662-0666 in Canada.**

Young children can wrap cords around their necks and STRANGLE.

- **Always keep cords out of the reach of children.**
- **Move cribs, playpens and other furniture away from cords.** Children can climb furniture to get to cords.
- **Do not tie cords together.** Make sure cords do not twist together and create a loop.

LIFETIME GUARANTEE

The Hunter Douglas Lifetime Guarantee is designed to ensure a thoroughly satisfying experience when selecting, purchasing and living with your window fashion products. If you are not thoroughly satisfied, simply contact Hunter Douglas Inc. at **1-888-501-8364** or visit **hunterdouglas.com**.

## COVERED

BY A LIFETIME LIMITED WARRANTY

- Hunter Douglas window fashion products are covered for defects in materials, workmanship or failure to operate
- Operational cords for a full 7 years from the date of purchase (applies to products sold after January 1, 2008)
- All internal mechanisms
- Components and brackets
- Fabric delamination
- Hunter Douglas PowerRise®, PowerTilt™ and PowerGlide® 2.0, all with Platinum Technology™, and all other Hunter Douglas motorization components are covered for 5 years from date of purchase
- Repairs and/or replacements will be made with like or similar parts or products

## NOT COVERED

BY A LIFETIME LIMITED WARRANTY

- Any conditions caused by normal wear and tear
- Abuse, accidents, misuse or alterations to the product
- Exposure to the elements (sun damage, wind, water/moisture) or discoloration over time (with the exception of EverWood® Collection alternative wood blinds which carry a "Satisfaction Guarantee" covering fading, yellowing, warping and bowing for the life of the product)
- Failure to follow our instructions with respect to measurement, proper installation, cleaning or maintenance
- Shipping charges, cost of removal and reinstallation

For further details, see the warranty card included with your order.

## TO OBTAIN WARRANTY SERVICE

1. Contact your original dealer (place of purchase) for warranty assistance.
2. Visit **hunterdouglas.com/customersupport** for additional warranty information and frequently asked questions.
3. Contact Hunter Douglas Inc. at **1-888-501-8364** (9:00 AM - 8:00 PM EST) for technical support, certain parts free of charge, for assistance in obtaining warranty service or for further explanation of our warranty.

**HunterDouglas**

hunterdouglas.com

5109537000 5/09