Installation And Care Instructions

Vertical Blind Collection

PermAlign® and PermaTrak® Headrail Systems

HunterDouglas

THANK YOU for purchasing a Hunter Douglas product. Your new blind has been custom built for you from the highest quality materials. Once in your window, it will provide you with a lifetime of beauty and trouble-free use.

Getting Started

- Remove headrail, vanes and valance (if applicable) from package. Do not discard any of the packaging material until the blind operates to your satisfaction.
- Check the diagram below to make sure you have the necessary parts. Note: Your valance may require assembly (see Step 5).
- Contents of your hardware package may vary depending upon whether the headrail is mounted inside or outside the window frame.

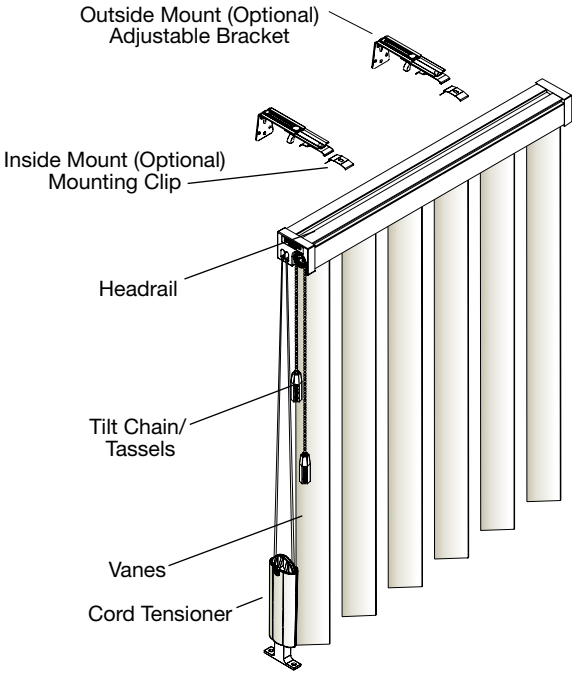

Tools needed for installing your blind:

- Flat blade and Phillips screwdrivers
- Measuring tape
- Pencil
- Power drill, 1/4" hex driver, and drill bits

In addition, you will need fasteners designed to work with your specific mounting surfaces:

Mounting Surface	Fastener
Wood	No. 6 Hex Head Screws (Not Provided)
Drywall, Plaster	Wall Anchors, Expansion Bolts (Not Provided)
Metal	Sheet Metal Screws (Not Provided)

For assistance, call the Hunter Douglas Customer Information Center at 1-888-501-8364
Visit our Web site at hunterdouglas.com

1 Inside Mount Installation

Measure And Mark Mounting Clip Location

- Mark mounting clip locations between 2" and 4" from each end of the headrail. Evenly space intermediate clips between end clips at 24" to 30" intervals. If available, use a mounting template to determine consistent mounting depth.

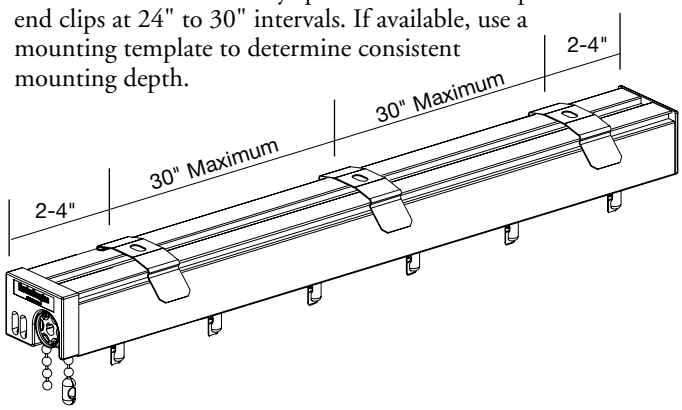

NOTE: If you do not have a mounting template, measure depth to allow ½" clearance between vane and window (i.e. 2¼" for 3½" vanes). Blinds having widths and lengths greater than 120" will require additional brackets to support the stacked vanes.

NOTE: If a valance is included, refer to Step 5 for valance assembly prior to installing the mounting clips.

NOTE: The inside surface of the valance dust cover has three parallel lines; use the center line to position drill holes.

Install Mounting Clips (And Assembled Valance)

- Drill pilot holes through dust cover valance at mounting clip locations as marked.
- Insert a screw through the mounting clip.
- Hold the valance in position and drill through the valance and into the ceiling.

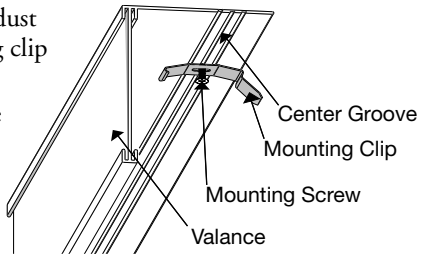

- Position a mounting clip at each hole and screw into place.
- Align and tighten the valance against the ceiling into its finished mounting position.
- Center the headrail underneath the mounting clips.

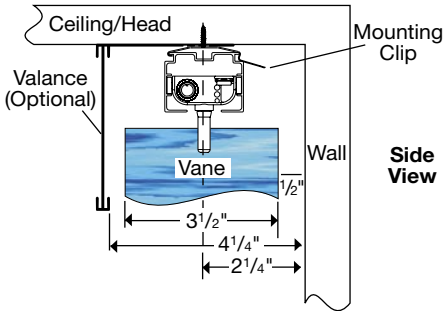

- Tilt the headrail and insert it into the front edge of the mounting clips. Pull forward, then roll the headrail back toward the rear of the blind. Push up and snap into place.

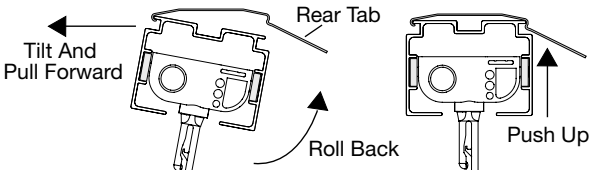

- To remove the headrail, locate the rear tab on the mounting clip.
- Push up on the rear tab to release the track.

2 Outside Mount Installation

- Mount "L" brackets 2" to 4" from each end of the headrail. Evenly space intermediate brackets between end brackets at 24" to 30" intervals.

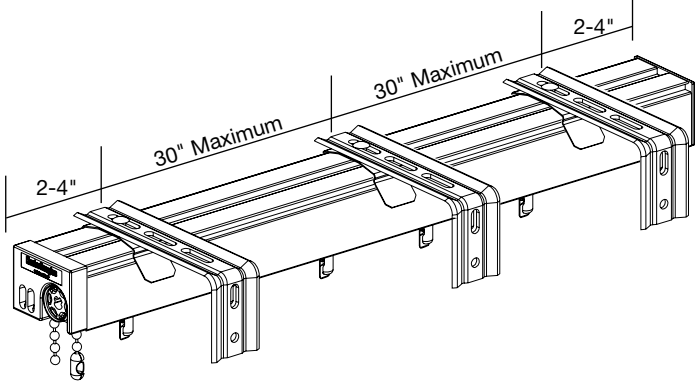

- Adjust mounting clips to allow ½" clearance between the vane and the wall (i.e. 2¼" for 3½" vane).
- Center headrail underneath mounting clips.
- Tilt the headrail and insert it into the front edge of the mounting clip. Pull and roll the headrail up toward the rear of the blind and snap into place.
- If a valance is included, "snap" on a valance hanger next to each "L" bracket.
- Center the valance in relationship to the headrail and slide it into the valance hanger.

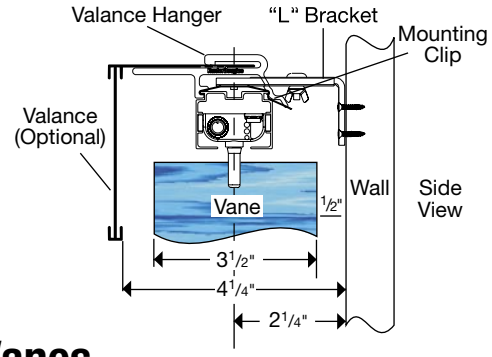

3 Attach Vanes

- Determine the desired light/view direction.

(Top-Down View)

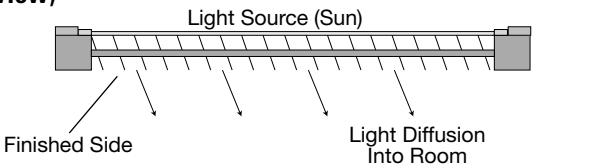

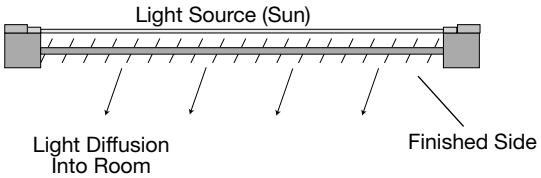

- Rotate the vane hooks so the slot between the long and the short prong is facing you.
- Push the vane into the hook until it "snaps" into place.

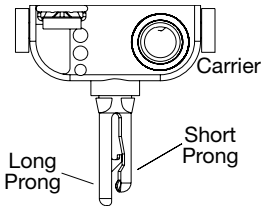

4 Remove Vanes

- Push up on the vane.
- Gently open the vane hook by inserting a credit card-sized piece of rigid plastic between the vane and the long prong of the vane hook.
- Carefully remove the vane.

5 Valance Assembly

Single-Tiered Closed Square Corner

Insert Attachment:

1. Cut a fabric insert for the valance and each valance return 1" longer at each end than the valance and valance return width.
2. Center the fabric insert in the valance and wrap the excess on each side around to the back of the valance.

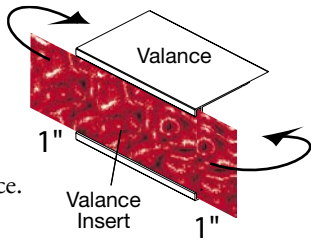

3. At one end, hold the fabric insert in place with a corner clip.
4. At the opposite end, pull the fabric insert tight and secure it in place with another corner clip.
5. Center each valance return fabric insert and wrap the excess on each side around to the back of the valance return.

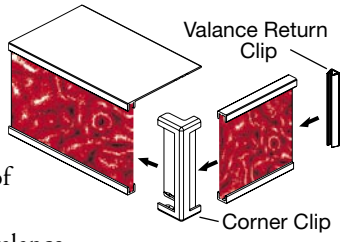

6. Attach the valance return to the valance using the already attached corner clip.
7. At the opposite end of the valance return, pull the fabric insert tight and secure it in place with a valance return clip.
8. Repeat steps 5-7 for the other valance return.

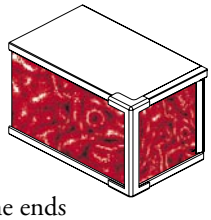

NOTE: Vinyl inserts should be cut flush with the ends of the valance and valance returns. Secure vinyl in place with the corner clip and valance return clips.

Single-Tiered Open Square Corner (Fabric Only)

1. Cut fabric long enough to wrap around the corner and over the entire return plus at least 1" excess at each end.

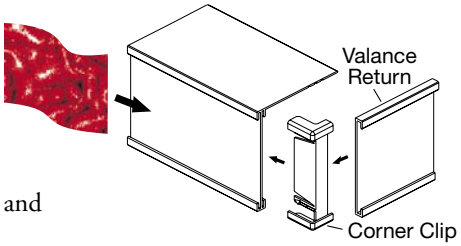

2. Attach the corner clip and valance returns.
3. Insert the fabric into the valance, wrap it through the corner clip and into the valance return.

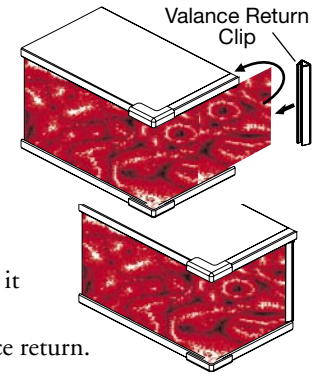

NOTE: Leave enough extra fabric at the other end of the fabric insert to be able to wrap around the other valance return.

4. Wrap excess fabric around the end of the valance return and secure it with a valance return clip.
5. Repeat steps 3-4 for the other valance return.

Single-Tiered Universal Round Corner:

1. Install the round valance corners onto each end of the valance.
2. Install the valance returns onto each end of the round valance corners.
3. Cut the fabric insert 4" longer than the total length of the valance plus both returns.

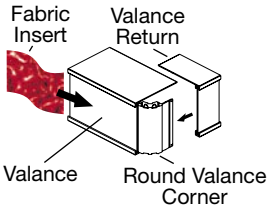

4. Place the fabric insert into the clear lips of the valance, continuing around the molded valance corner and through the valance return.
5. Wrap excess fabric around the end of the valance return and secure it with a valance return clip.

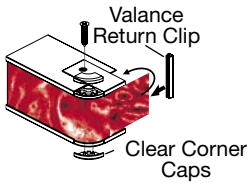

6. From the other end of the fabric insert, pull the fabric tight, then repeat steps 4-5.
7. Attach the clear corner caps onto the valance corners, top and bottom.
8. Use a (#4) 1/2" screw to secure each valance return onto the valance dust cover surface.

NOTE: Vinyl inserts should be cut flush with the ends of the valance returns. Secure vinyl in place with the valance return clips.

Double-Tiered Universal Round Corner

1. To install the double-tiered universal round corner valance, follow the instructions for the single-tiered universal round corner valance. The corner caps are installed on the top and bottom of the upper valance and ***only*** on the bottom of the lower valance.

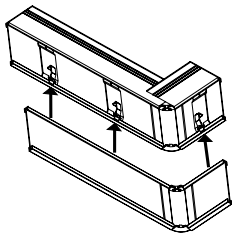

2. Install the valance stacking clips into the back lips of the (upper) dust cover valance, and space 24" apart. For an outside mount (OB) only, add an additional stacking clip to each return.

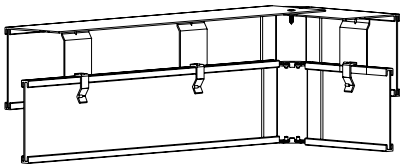

3. For an inside mount (IB), use the rear groove of the valance dust cover to position drill holes.

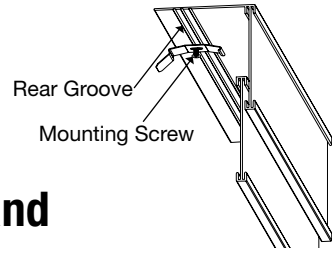

6 Cord Tensioner and Cord Length

⚠ WARNING

The cord tensioner must be properly installed for the pulley to rotate and for the cords to be kept taut. Proper installation will help reduce the chance of accidental strangulation by making the cords less accessible to young children.

Sill Mounted

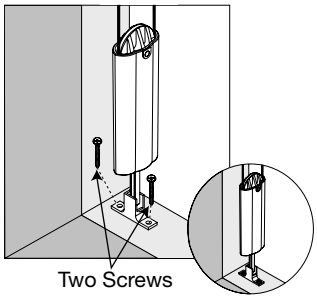

Jamb Mounted

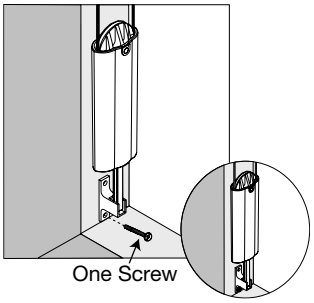

Wall Mounted

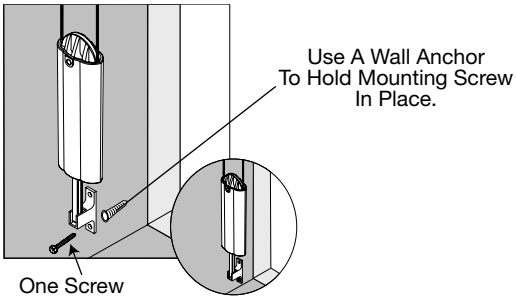

7 Cord Tensioning

- Determine mounting location. If cord adjustment is required, refer to step 8.
- Fully extend the cord tensioning device, rotate the body 45 degrees and lock it into this extended position.
- Position the cord tensioning device at the mounting location.
- Hold the cord taut with the cord tensioning device in the extended position and mount the base.
- Release the tension by rotating the base 45 degrees relative to body.

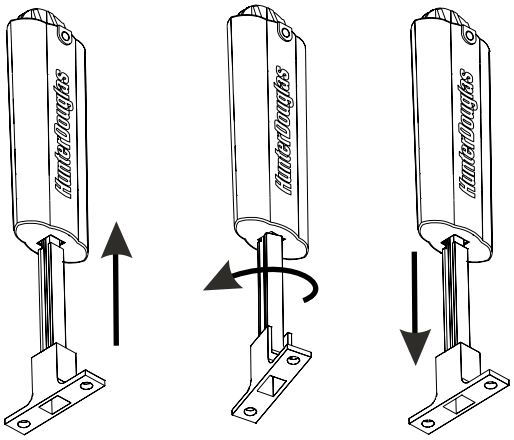

NOTE: Cord tensioning applies only if the blind is ordered with a chain and cord control system.

8 Cord Adjustment

To reduce cord length on a <u>Side Draw</u> Blind:

- Release the tension on the cord with the cord tensioner.
- Place the blind in the open position.
- Locate the cord knot in the front of the lead carrier.
- Pull the cord to the desired length.
- Tie a double knot.
- Reset the cord tension with the cord tensioner.
- Test for proper cord tension.
- Cut the excess cord.

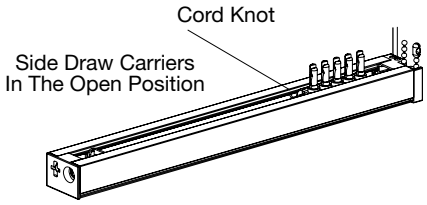

To reduce cord length on <u>Center Draw</u> Blinds:

- Release the tension on the cord with the cord tensioner.
- Place the blind in the closed position.
- Locate the cord ends in the front of the lead carrier.
- Select the cord knot that adjusts the cord length only; if carrier movement is observed, select the other cord.

CAUTION: Cutting the wrong cord will cause irreparable damage.

- Pull the cord to the desired length.
- Tie a double knot.
- Reset the tension with the cord tensioner.
- Test for proper cord tension.
- Cut the excess cord.

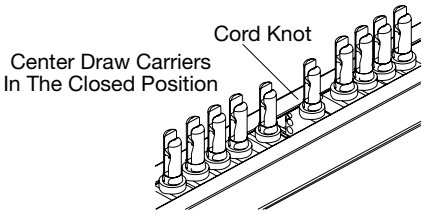

9 Care And Cleaning

Dusting

Regular light dusting with a feather duster is all the cleaning that is needed in most circumstances.

Vacuuming

Use a hand-held vacuum with low suction for more thorough dust removal.

Spot-Cleaning

- Prepare a solution of warm water and a mild detergent.
- Dampen a clean cloth in the solution and wring it out.
- Dab the spot with the dampened cloth until it is gone.

CAUTION: Vertical fabrics should not be spot-cleaned or immersed in water.

Compressed Air

You can use compressed air or a hair dryer (cool setting) to blow the dust off your valance.

For more comprehensive cleaning instructions, call the Hunter Douglas Customer Information Center toll free at:

1-888-501-8364

HUNTER DOUGLAS DESIGNED WITH SAFETY IN MIND

HunterDouglas

LIGHT CAN CHANGE EVERYTHING™

hunterdouglas.com

© 2005 Hunter Douglas Inc. ® Registered trademark of Hunter Douglas Inc.
™ Trademark of Hunter Douglas Inc.
Patented in the U.S. and foreign countries. Other U.S. and foreign patents pending.

PCN 77PAPT0105 rev. 11/05